RECEIVED: 25/01/2023

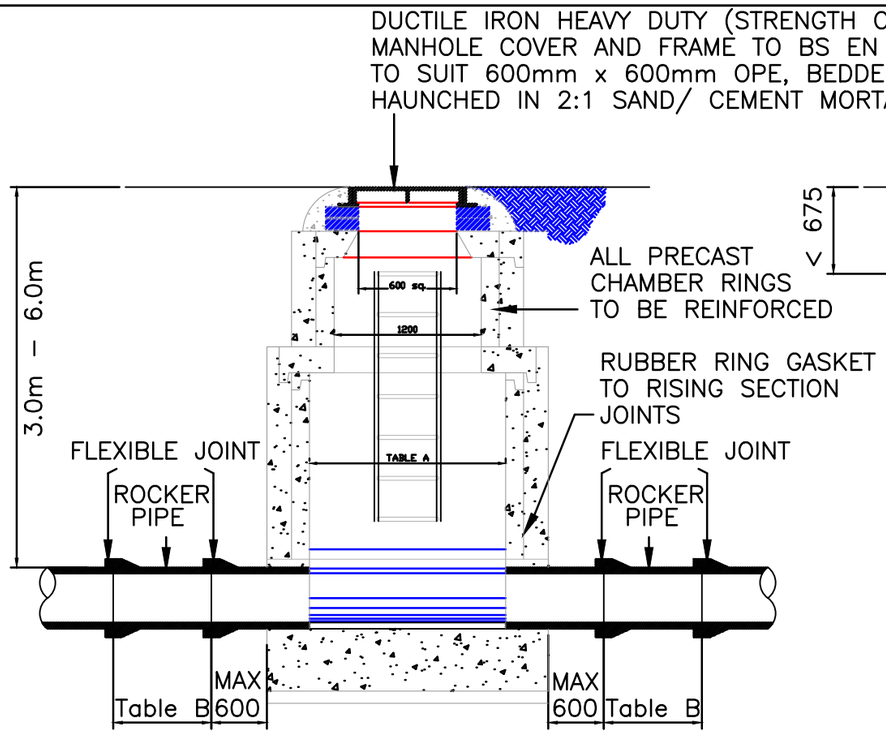

SECTION A

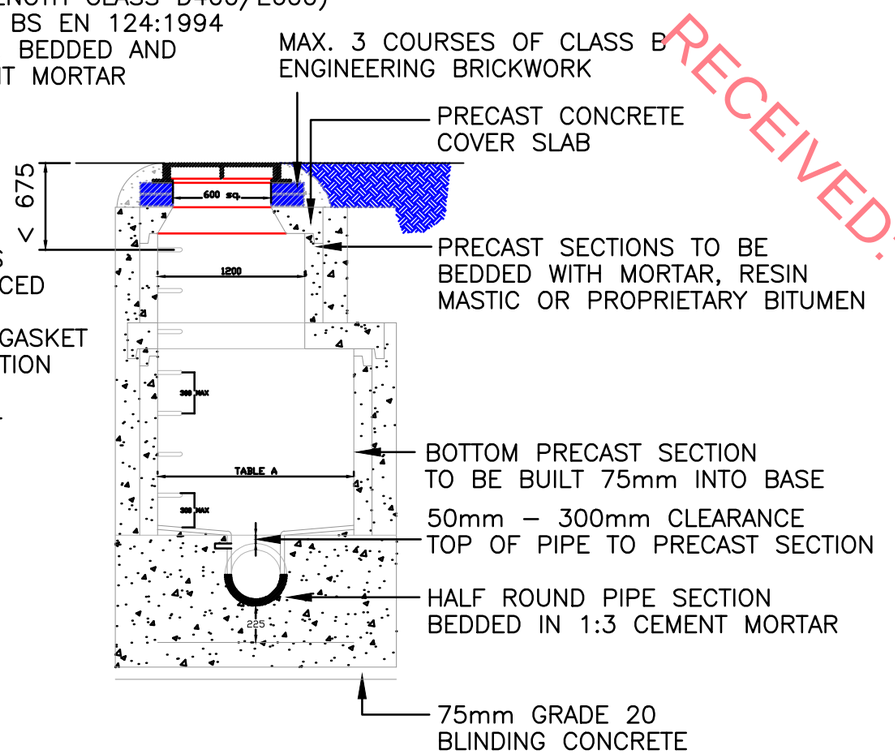

SECTION B

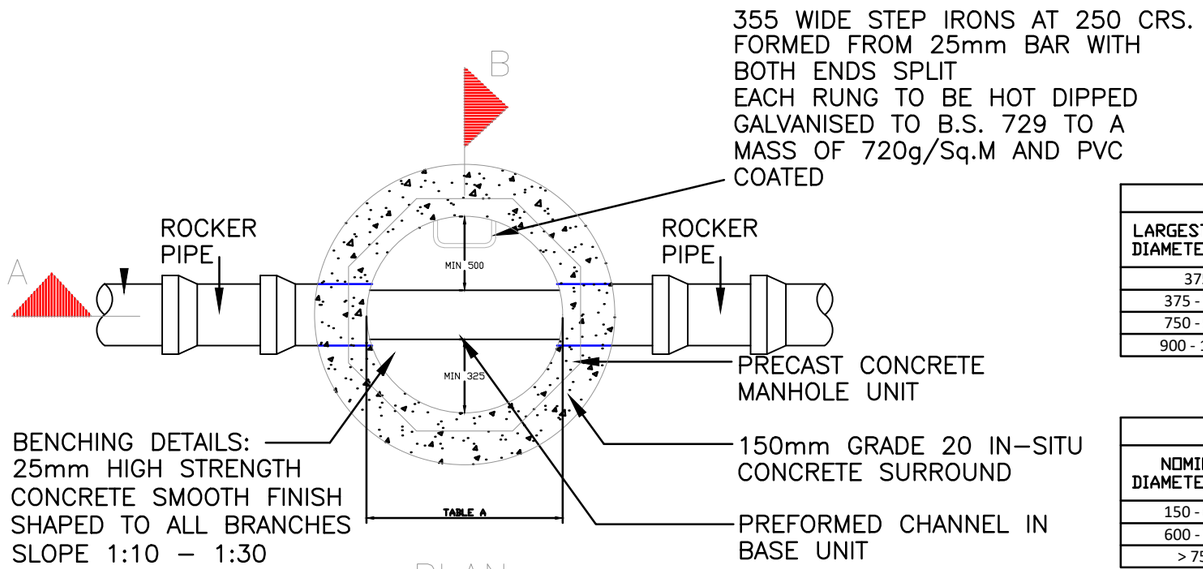

PLAN

TABLE A	
LARGEST PIPE DIAMETER (mm)	MINIMUM MANHOLE DIAMETER (mm)
375	1200
375 - 750	1500
750 - 900	1800
900 - 1200	2100

TABLE B	
NOMINAL DIAMETER (mm)	EFFECTIVE LENGTH (mm)
150 - 600	600
600 - 750	1000
> 750	1250

STANDARD PRECAST MANHOLE – TYPE HH_C_2

REVISION DETAILS	DATE

THIS DRAWING AND ANY DESIGN HEREON IS THE COPYRIGHT OF THE CONSULTANTS AND MUST NOT BE REPRODUCED WITHOUT THEIR WRITTEN CONSENT.

ALL DRAWINGS REMAIN THE PROPERTY OF THE CONSULTANTS. ALL DIMENSIONS TO BE VERIFIED AND CHECKED ON SITE. CONSULTANTS TO BE INFORMED OF ANY DISCREPANCIES BEFORE WORK PROCEEDS.

	CONCRETE GRADE	COVER
EXPOSURE CONDITIONS		
MILD DRY ENCLOSED	30N/mm^2	25mm
FOUNDATIONS DAMP	35N/mm^2	30mm
SEVERE EXPOSED	40N/mm^2	40mm

	CEMENT CONTENT	MAX. FREE WATER CEMENT RATIO
EXPOSURE CONDITIONS		
MILD DRY ENCLOSED	275kg/m^3	0.65
FOUNDATIONS DAMP	300kg/m^3	0.60
SEVERE EXPOSED	325kg/m^3	0.55

MAX. SIZE OF AGGREGATE TO BE 20mm.

Issue: PLANNING

Project: Springfort Meadows
Nenagh, Co. Tipperary

Client: SINGLAND HOMES LTD.

Drawing Title: TYPICAL MANHOLE DETAIL
HH_C_2
(3m - 6m Deep)

Drawn.	Scale.	Checked.	Date.
MP	1:50	DOM	17.01.2023

HUTCH O'MALLEY
CONSULTING ENGINEERS
Hutch O' Malley Consulting Engineers
The Railway Station, Attyflin, Patrickswell, Co.Limerick
Phone: 061-320260 E-Mail: michelle@hutchomalley.ie
www.hutchomalley.ie

Project No.	Drawing No.	Revision
18068	C52	